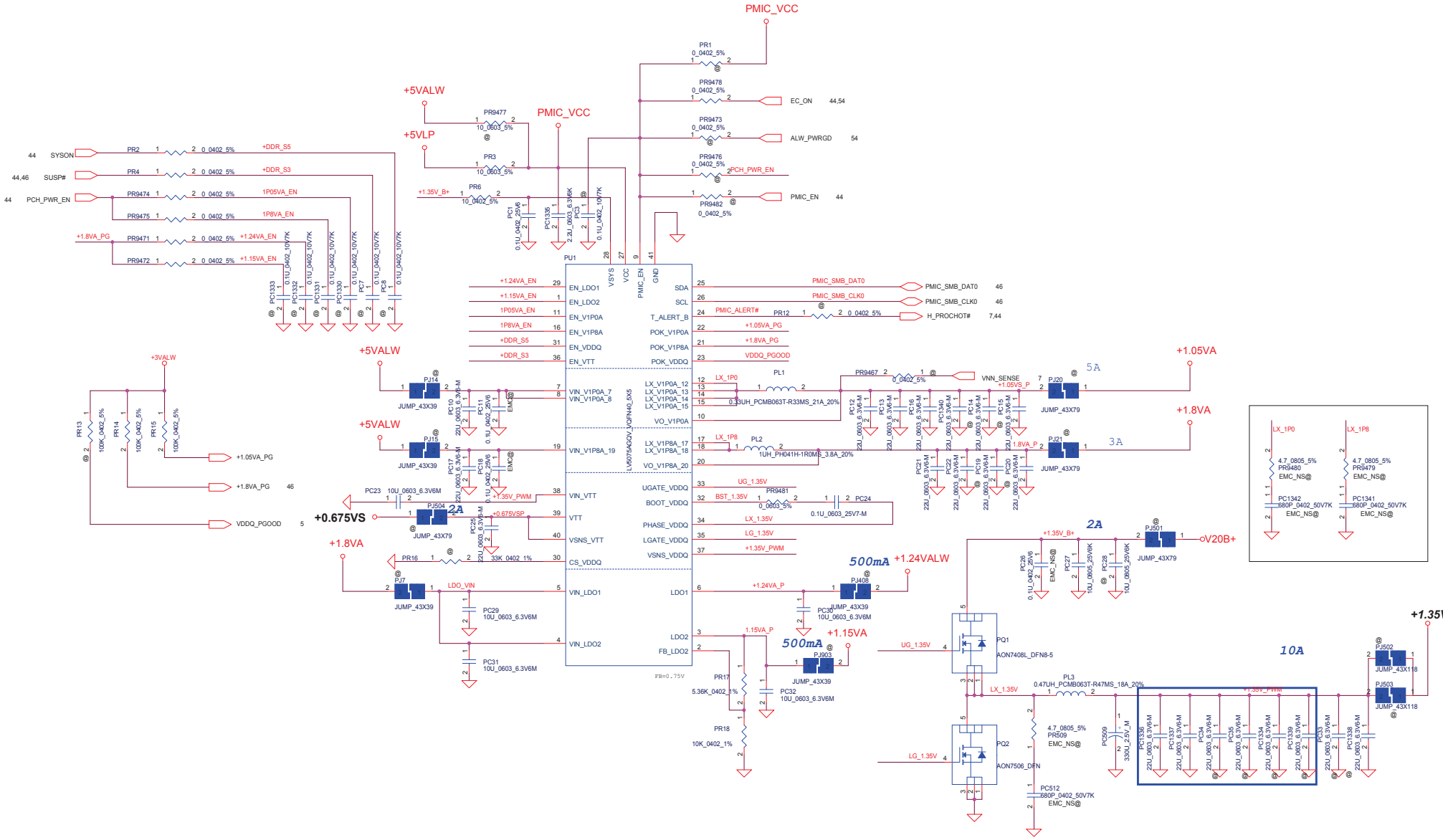
PMIC_VCC
+5VALW
+5VLP
PMIC_VCC
PR1 0_0402_5%
PR9478 0_0402_5%
EC_ON 44,54
PR9477 10_0603_5%
PR9473 0_0402_5%
ALW_PWRGD 54
PR3 10_0603_5%
PR9476 0_0402_5%
PCH_PWR_EN
PR6 10_0402_5%
PMIC_EN 44
PR9482 0_0402_5%
44 SYSON
44,46 SUSP#
44 PCH_PWR_EN
PR2 0_0402_5% +DDR_S5
PR4 0_0402_5% +DDR_S3
PR9474 0_0402_5% 1P05VA_EN
PR9475 0_0402_5% 1P8VA_EN
+1.8VA_PG
PR9471 0_0402_5% +1.24VA_EN
PR9472 0_0402_5% +1.15VA_EN
PU1
EN_LDO1
EN_LDO2
EN_V1P0A
EN_V1P8A
EN_VDDQ
EN_VTT
VIN_V1P0A_7
VIN_V1P0A_8
VIN_V1P8A_19
VIN_VTT
VTT
VSNS_VTT
CS_VDDQ
VIN_LDO1
VIN_LDO2
VSYS
VCC
PMIC_EN
GND
SDA
SCL
T_ALERT_B
POK_V1P0A
POK_V1P8A
POK_VDDQ
LX_V1P0A_12
LX_V1P0A_13
LX_V1P0A_14
LX_V1P0A_15
VO_V1P0A
LX_V1P8A_17
LX_V1P8A_18
VO_V1P8A_20
UGATE_VDDQ
BOOT_VDDQ
PHASE_VDDQ
LGATE_VDDQ
VSNS_VDDQ
LDO1
LDO2
FB_LDO2
LV5075AGQV_VQFN40_5X5
PMIC_SMB_DAT0
PMIC_SMB_CLK0
PMIC_ALERT#
PR12 0_0402_5%
H_PROCHOT# 7,44
+1.05VA_PG
+1.8VA_PG
VDDQ_PGOOD
+1.24VA_EN
+1.15VA_EN
1P05VA_EN
1P8VA_EN
+DDR_S5
+DDR_S3
+5VALW
PJ14 JUMP_43X39
PJ15 JUMP_43X39
PC10 22U_0603_6.3V6-M
PC11 0.1U_0402_25V6
PC17 22U_0603_6.3V6-M
PC18 0.1U_0402_25V6
+3VALW
PR13 100K_0402_5%
PR14 100K_0402_5%
PR15 100K_0402_5%
+1.05VA_PG
+1.8VA_PG 46
VDDQ_PGOOD 5
PC23 10U_0603_6.3V6M
PJ504 JUMP_43X79
2A
+0.675VS
+1.35V_PWM
+0.675VSP
PC35 22U_0603_6.3V6-M
PR16 33K_0402_1%
+1.8VA
PJ7 JUMP_43X39
LDO_VIN
PC29 10U_0603_6.3V6M
PC31 10U_0603_6.3V6M
PL1 0.33UH_PCMB063T-R33MS_21A_20%
LX_1P0
PL2 1UH_PH041H-1R0MS_3.8A_20%
LX_1P8
PR9467 0_0402_5%
VNN_SENSE
+1.05VS_P
PJ20 JUMP_43X79
5A
+1.05VA
PJ21 JUMP_43X79
3A
+1.8VA
PC12 22U_0603_6.3V6-M
PC13 22U_0603_6.3V6-M
PC16 22U_0603_6.3V6-M
PC1340 22U_0603_6.3V6-M
PC14 22U_0603_6.3V6-M
PC15 22U_0603_6.3V6-M
PC21 22U_0603_6.3V6-M
PC22 22U_0603_6.3V6-M
PC19 22U_0603_6.3V6-M
PC20 22U_0603_6.3V6-M
UG_1.35V
PR9481 0_0603_5%
BST_1.35V
PC24 0.1U_0603_25V7-M
LX_1.35V
LG_1.35V
+1.35V_PWM
+1.24VA_P
PJ408 JUMP_43X39
500mA
+1.24VALW
PC30 10U_0603_6.3V6M
1.15VA_P
PJ903 JUMP_43X39
500mA
+1.15VA
PR17 5.36K_0402_1%
PC32 10U_0603_6.3V6M
PR18 10K_0402_1%
FB=0.75V
+1.35V_B+
PC26 0.1U_0402_25V6
PC27 10U_0605_25V6K
PC28 10U_0605_25V6K
PJ501 JUMP_43X79
V20B+
2A
PQ1 AON7408L_DFN8-5
PL3 0.47UH_PCMB063T-R47MS_18A_20%
PQ2 AON7506_DFN
PR509 4.7_0805_5% EMC_NS@
PC509 330U_2.5V_M
PC512 680P_0402_50V7K EMC_NS@
10A
+1.35V
PJ502 JUMP_43X118
PJ503 JUMP_43X118
PC1336 22U_0603_6.3V6M
PC1337 22U_0603_6.3V6M
PC34 22U_0603_6.3V6M
PC35 22U_0603_6.3V6M
PC1334 22U_0603_6.3V6M
PC1339 22U_0603_6.3V6M
PC33 22U_0603_6.3V6M
PC1338 22U_0603_6.3V6M
LX_1P0
LX_1P8
PR9480 4.7_0805_5% EMC_NS@
PR9479 4.7_0805_5% EMC_NS@
PC1342 680P_0402_50V7K EMC_NS@
PC1341 680P_0402_50V7K EMC_NS@