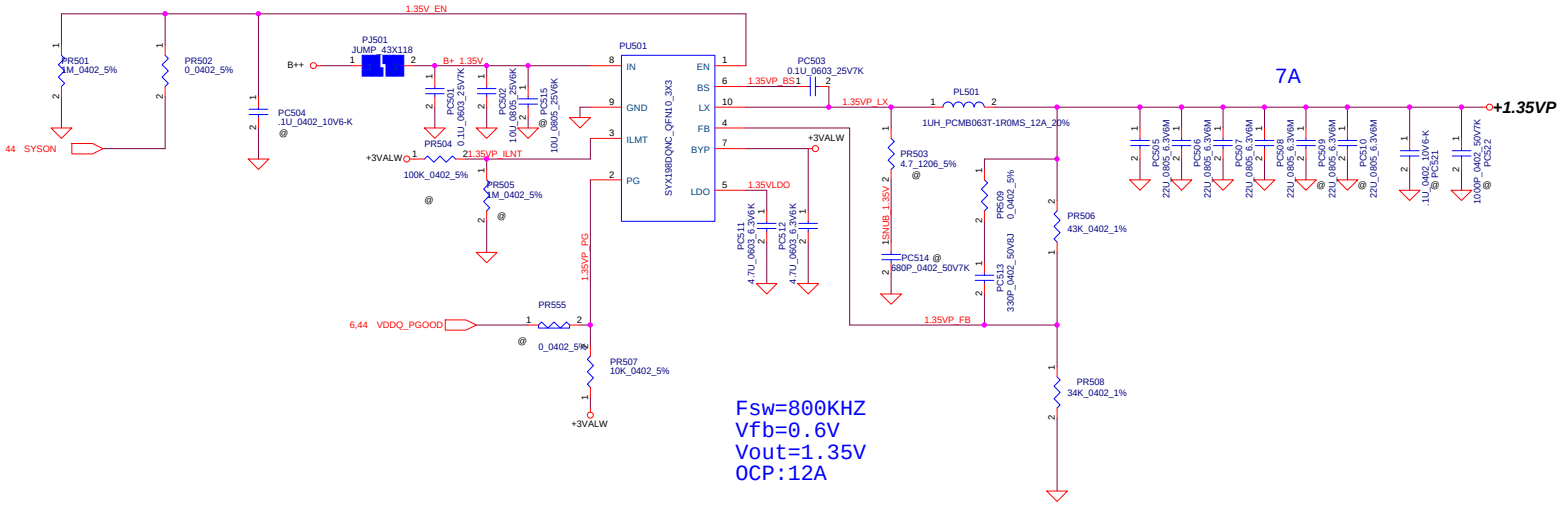
1.35V_EN
PR501
1M_0402_5%
PR502
0_0402_5%
PC504
.1U_0402_10V6-K
@
44 SYSON
B++
PJ501
JUMP_43X118
B+_1.35V
PC501
0.1U_0603_25V7K
PC502
10U_0805_25V6K
PC515
10U_0805_25V6K
@
PU501
IN
GND
ILMT
PG
EN
BS
LX
FB
BYP
LDO
SY X1980DQNC_QFN10_3X3
PC503
0.1U_0603_25V7K
1.35VP_BS1
1.35VP_LX
PL501
1UH_PCMB063T-1R0MS_12A_20%
7A
+1.35VP
+3VALW
PR504
100K_0402_5%
@
1.35VP_ILNT
PR505
1M_0402_5%
@
1.35VLDO
PC511
4.7U_0603_6.3V6K
PC512
4.7U_0603_6.3V6K
PR503
4.7_1206_5%
@
1.5NUB_1.35V
PC514 @
680P_0402_50V7K
PR509
0_0402_5%
PC513
330P_0402_50V8J
1.35VP_FB
PR506
43K_0402_1%
PR508
34K_0402_1%
PC505
22U_0805_6.3V6M
PC506
22U_0805_6.3V6M
PC507
22U_0805_6.3V6M
PC508
22U_0805_6.3V6M
PC509
22U_0805_6.3V6M
@
PC510
22U_0805_6.3V6M
@
1U_0402_10V6-K
@ PC521
1000P_0402_50V7K
PC522
@
1.35VP_PG
PR555
0_0402_5%
@
6,44 VDDQ_PGOOD
PR507
10K_0402_5%
+3VALW
Fsw=800KHZ
Vfb=0.6V
Vout=1.35V
OCP:12A