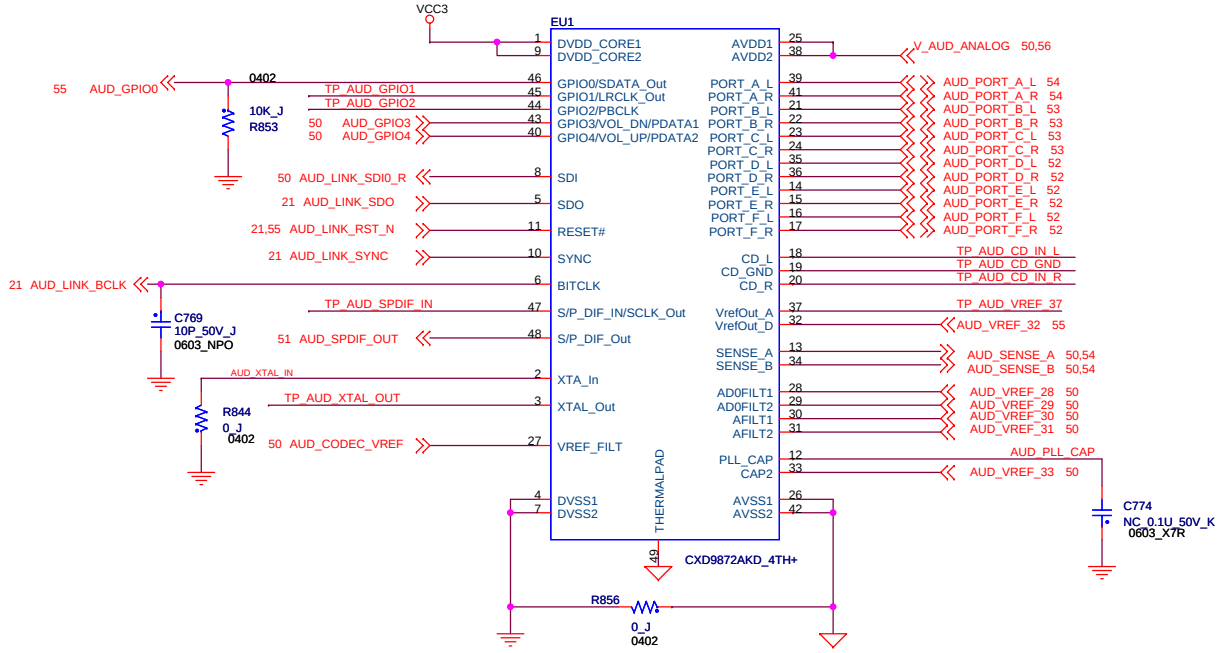

FOXCONN	HON HAI Precision Ind. Co., Ltd. CCPBG - R&D Division	
Title	AUDIO CODEC	
Size A3	Document Number M713-1-01	Rev 1.0
Date: Tuesday, July 10, 2007	Sheet 49 of 83	